PART NO.	"A"	"B"
CIB-16CR	15.88 [403,2]	15.65 [397,4]
VIB-20CR	18.56 [471,4]	19.88 [504,8]

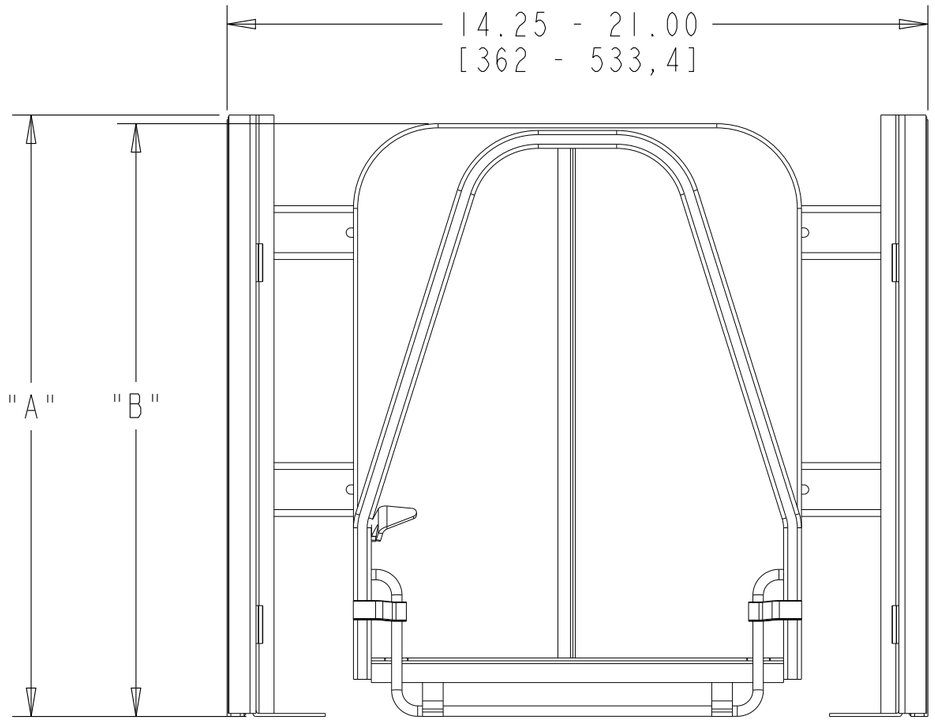

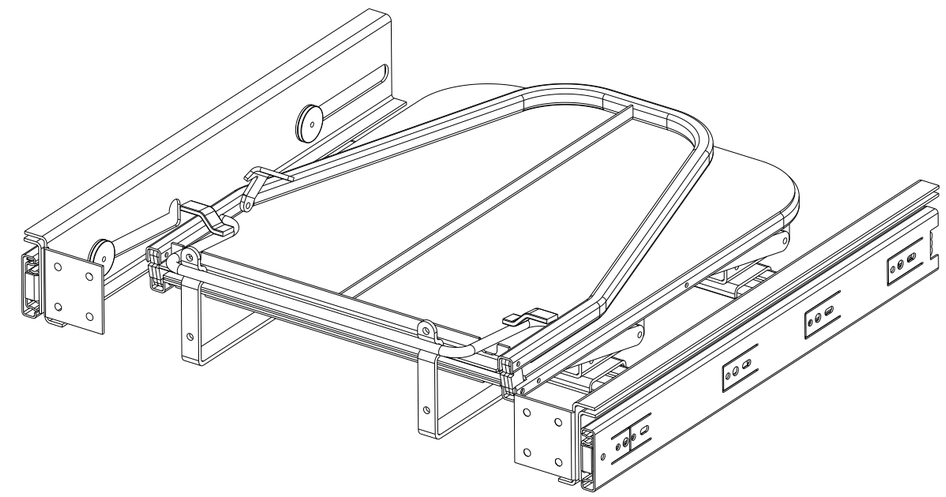

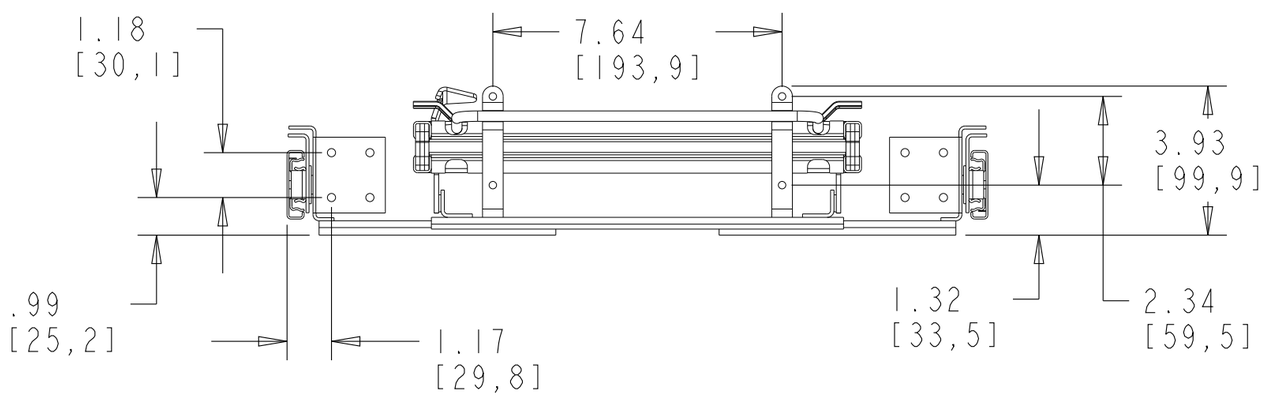

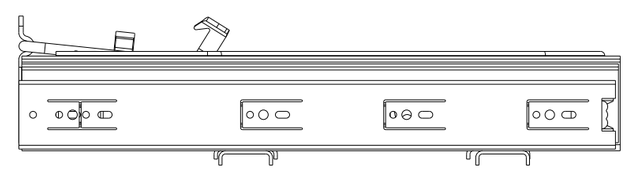

CUSTOMER DRAWING

REV.	DATE	BY	DESCRIPTION OF CHANGE

INCH [MM] — AMERICAN PROJECTION

	BY	DATE
DRAWN	LCS	6-15-23

TOLERANCES
MAT. DEC.
(WOOD) .XX ±.03 [.8mm]
(OTHER) .XX ±.02 [.5mm]
(ALL) .XXX ±.005 [.13 mm]
FRACTIONS ±1/32 [.8 mm]
ANGLES ±1/2°

MATERIAL
FINISH

REV-A-SHELF®, INC.

SIZE B — PULLOUT IRONING BOARD

DRAWING NO. XIB-XXCR — SCALE 0.250

PART NO. XIB-XXCR — SHEET 1 OF 3

PART NO.	"C"	"D"	"L"	"W"
CIB-16CR	37.75 [958,8]	9.57 [243,1]	29.20 [741,7]	11.80 [299,7]
VIB-20CR	43.00 [1092,2]	13.50 [342,9]	37.70 [957,6]	11.80 [299,7]

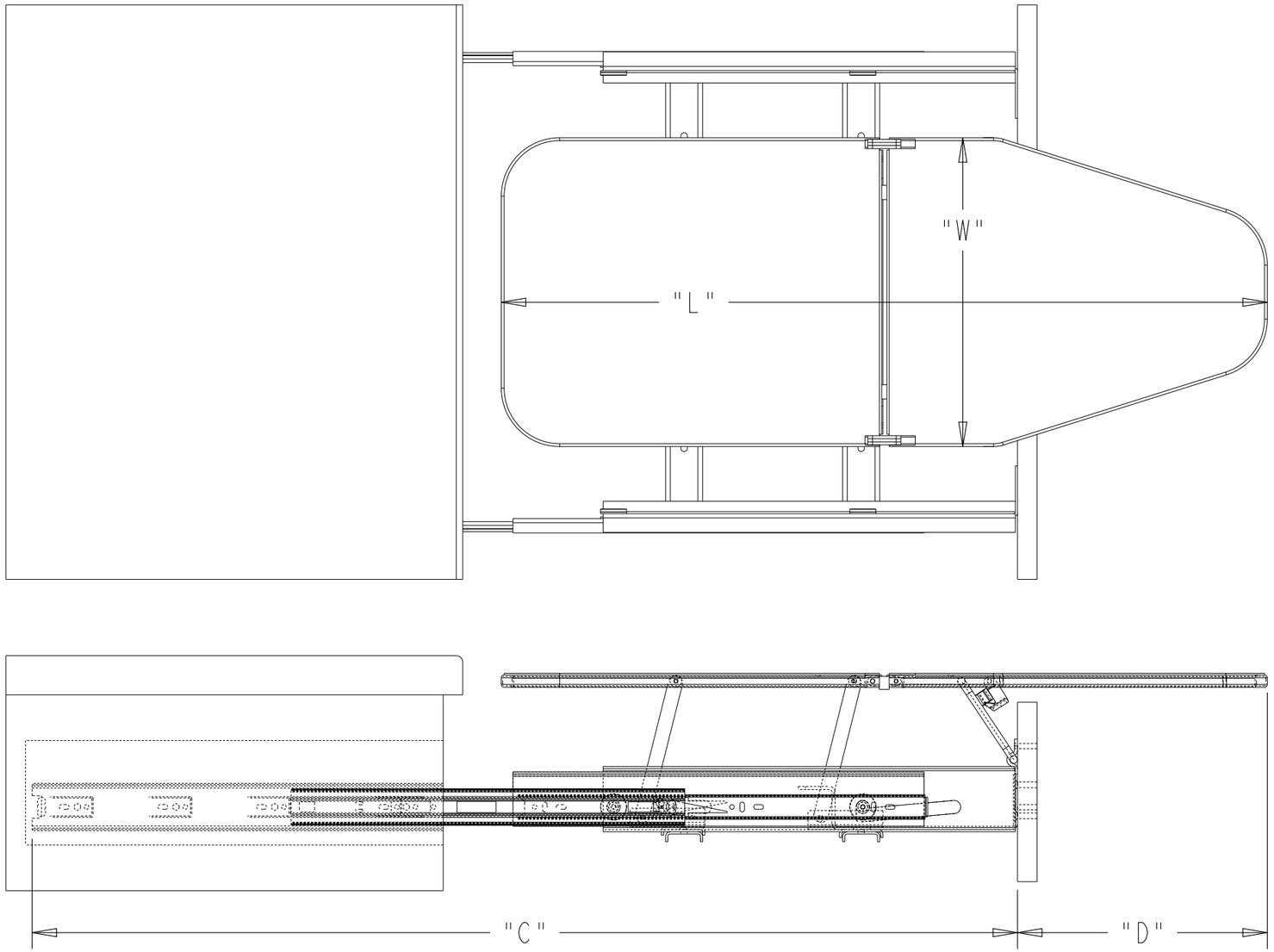

CUSTOMER DRAWING

REV.	DATE	BY	DESCRIPTION OF CHANGE

INCH [MM]

AMERICAN PROJECTION

	BY	DATE
DRAWN	LCS	6-15-23

TOLERANCES
MAT. DEC.
(WOOD) .XX ±.03 [.8mm]
(OTHER) .XX ±.02 [.5mm]
(ALL) .XXX ±.005 [.13 mm]
FRACTIONS ±1/32 [.8 mm]
ANGLES ±1/2°

MATERIAL

FINISH

REV-A-SHELF®, INC.

SIZE B

PULLOUT IRONING BOARD

DRAWING NO. XIB-XXCR

SCALE 0.200

PART NO. XIB-XXCR

SHEET 2 OF 3

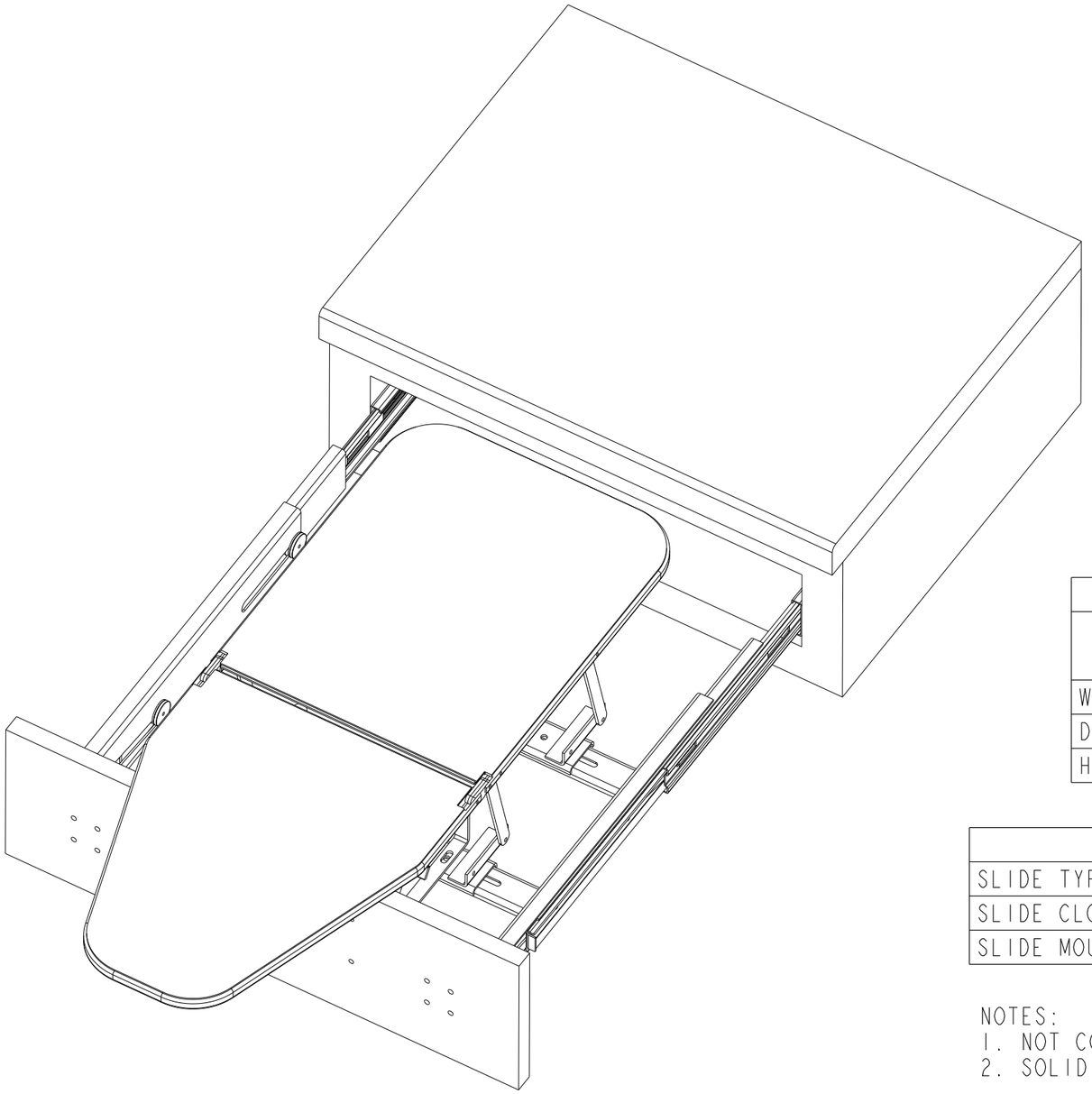

PART NO.	"E"	"F"
CIB-16CR	15.88 [403,2]	16.00 [406,4]
VIB-20CR	19.88 [504,8]	20.00 [508]

PART DIMENSIONS		
	MIN	MAX
WIDTH	14.25 [362]	21.00 [533,4]
DEPTH	"E"	
HEIGHT	3.93 [99,9]	

MIN CABINET OPENING				
	FACE FRAME	FRAMELESS	INSET FACE FRAME	INSET FRAMELESS
WIDTH	14.25 [362]	14.25 [362]	N/A	N/A
DEPTH	"F"	"F"	N/A	N/A
HEIGHT	4.00 [101,6]	4.00 [101,6]	N/A	N/A

SLIDE SPECIFICATIONS				
SLIDE TYPE	BALL BEARING	SLIDE EXTENSION	OVER-EXTENSION	MAX WEIGHT RATING
SLIDE CLOSING	N/A	SLIDE LENGTH	"A" (PAGE 1)	
SLIDE MOUNTING	SIDE	SLIDE FINISH	ZINC	

NOTES:
1. NOT COMPATIBLE WITH INSET CABINETRY
2. SOLID SURFACE COUNTER OVERLAYS CANNOT EXCEED 1-1/4"

CUSTOMER DRAWING

REV.	DATE	BY	DESCRIPTION OF CHANGE

INCH [MM] — AMERICAN PROJECTION

	BY	DATE
DRAWN	LCS	6-15-23

TOLERANCES
MAT. DEC.
(WOOD) .XX ±.03 [.8mm]
(OTHER) .XX ±.02 [.5mm]
(ALL) .XXX ±.005 [.13 mm]
FRACTIONS ±1/32 [.8 mm]
ANGLES ±1/2°

MATERIAL
FINISH

REV-A-SHELF®, INC.

SIZE B — PULLOUT IRONING BOARD

DRAWING NO. XIB-XXCR — SCALE 0.200

PART NO. XIB-XXCR — SHEET 3 OF 3