CLIQSTUDIOS®
RTA
Ready-To-Assemble
Northfield Stone

Awesome professional design services and quality cabinets.

"This was the second kitchen we've designed and remodeled with CliqStudios. Robyn was a pleasure to work with. She facilitated the process from initial concept to final design, providing detailed renderings and cabinet plans. We have found the cabinets to be a quality product at a very competitive price. I would highly recommend CliqStudios for your next project." - Peter

CLIQSTUDIOS®

FIND A LOWER PRICE. PRICE MATCH GUARANTEE WE'LL BEAT IT!

Welcome to CliqStudios.

Our design team will bring your ideas to life. You'll receive so much more than cabinets when you work with CliqStudios. You can be confident you are getting the best selection, best design, and best price.

Our customers tell us everyday how much they appreciate CliqStudios' simple, direct process and design expertise. Design expertise means you'll get fresh ideas, smart solutions that meet your budget, and just the right options to make a project picture-perfect.

You'll receive detailed floor plans, photo-quality renderings and 3D lifelike walk-throughs. You'll truly see what your new kitchen will look like before you order.

Thank you for inviting us to be a part of your project.

Preston Snow and Steel

Styles and Colors

Available fully-assembled by CliqStudios or shipped to you ready-to-assemble.

FULLY PRE-ASSEMBLED or ASSEMBLY REQUIRED

Preston Snow

Preston Steel

Afton Iris

Dawson Taupe

Franklin Sterling

Franklin Sterling

Pioneer Hickory

Styles and Colors

Northfield Cotton

Northfield Dove

Northfield Pro Cotton

Available fully-assembled by CliqStudios or shipped to you ready-to-assemble.

FULLY PRE-ASSEMBLED or **ASSEMBLY REQUIRED**

Northfield Smoke Grey

Northfield Stone Wood

Styles and Colors

Available fully-assembled by CliqStudios or shipped to you ready-to-assemble.

FULLY PRE-ASSEMBLED or **ASSEMBLY REQUIRED**

Shaker Winter

Shaker Smoke Grey

Shaker Espresso

Shaker Winter & Smoke Grey

CLIQ STUDIOS®

- Ready-to-Assemble or Assembled
- Easy-to-Use Financing
- Price Match Guarantee
- 5-Year Warranty

Shop Online Now!

888-350-1242
cliqstudios.com

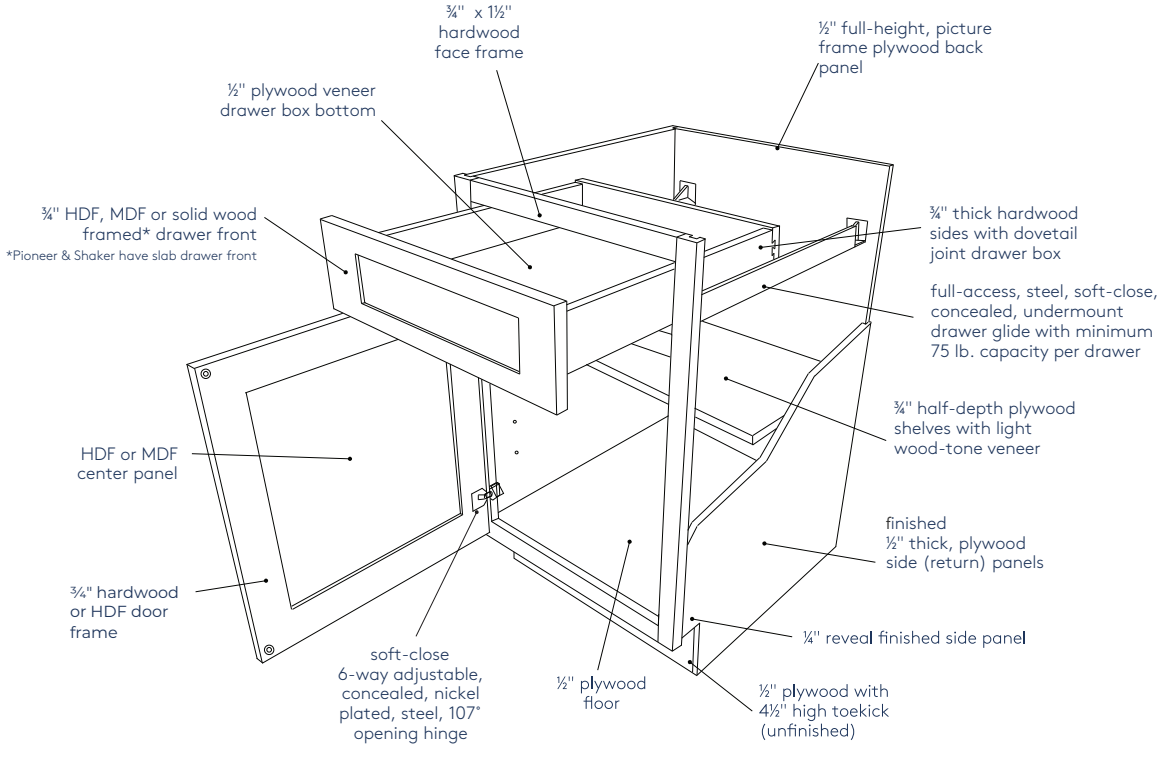

© CliqStudios.com