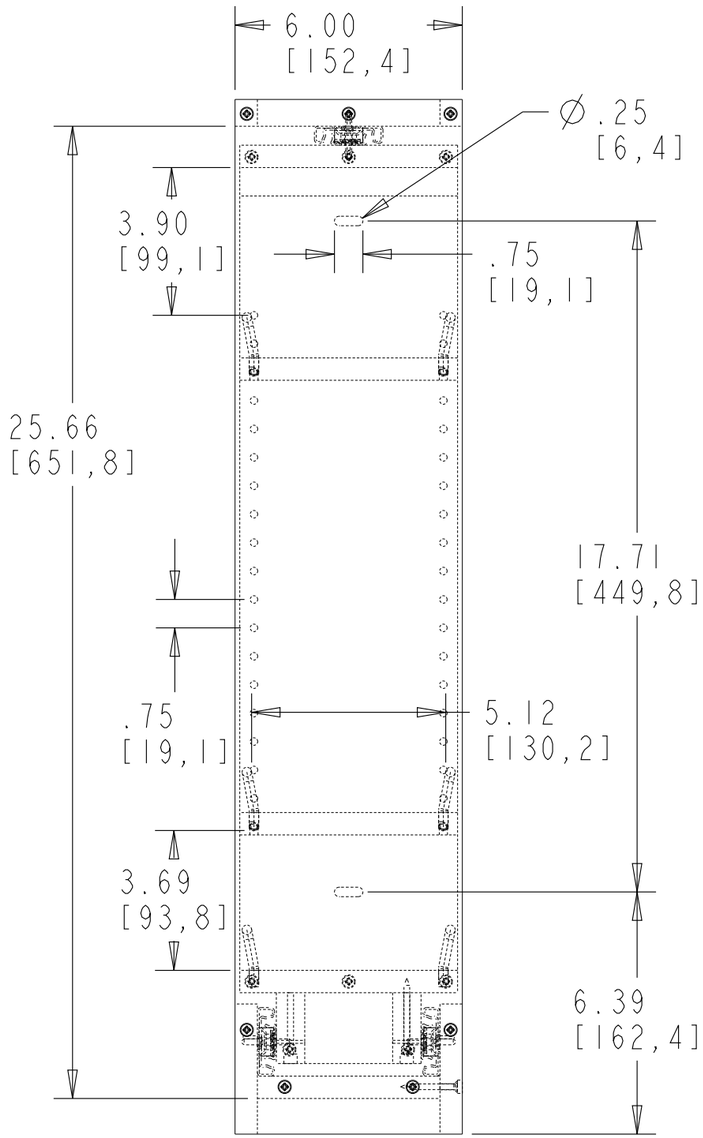


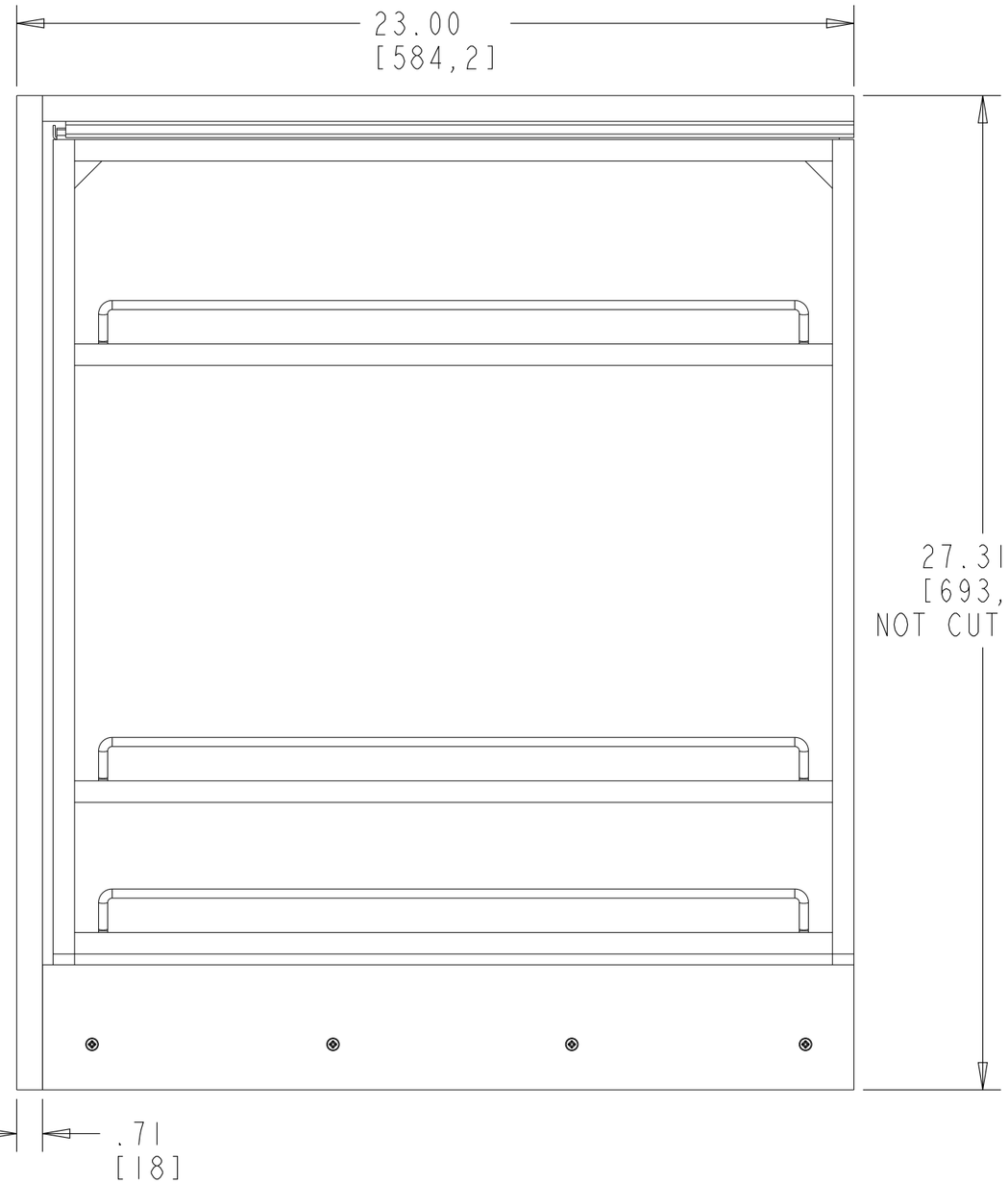


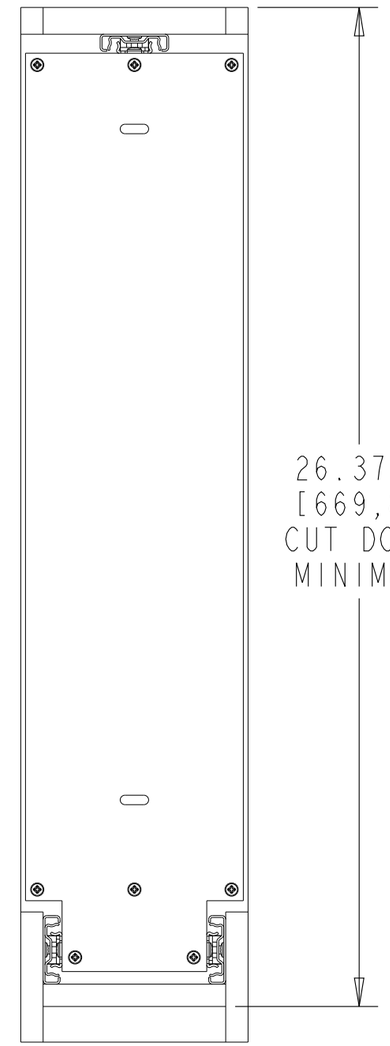


CUSTOMER DRAWING

This drawing is the property of Rev-A-Shelf (RAS) and is disclosed in confidence to the extent its subject matter is original to RAS. Any vendor receiving this drawing from RAS shall hold and use this drawing for the sole benefit of RAS and shall not disclose it to, or use or reproduce it for any third party, or perform any act adverse to the interest of RAS with respect to this drawing without the express written permission of RAS. Vendors shall not revise any physical, dimensional or performance characteristic unless authorized by Rev-A-Shelf Engineering.

| REV. | DATE | BY | DESCRIPTION OF CHANGE |
|---|---|---|---|
| | | | |
| | | | |
| | | | |
| | | | |

INCH [MM]

AMERICAN PROJECTION

| | BY | DATE |
|---|---|---|
| DRAWN | LCS | 8/08/22 |

TOLERANCES
MAT. DEC.
(WOOD) .XX ±.03 [.8mm]
(OTHER) .XX ±.02 [.5mm]
(ALL) .XXX ±.005 [.13 mm]
FRACTIONS ±1/32 [.8 mm]
ANGLES ±1/2°

MATERIAL

FINISH

REV-A-SHELF® INC.

SIZE B

6" BASE ORGANIZER PULLOUT 438

DRAWING NO. 438-BC-6C

SCALE 0.250

PART NO. 438-BC-6C

SHEET 1 OF 2

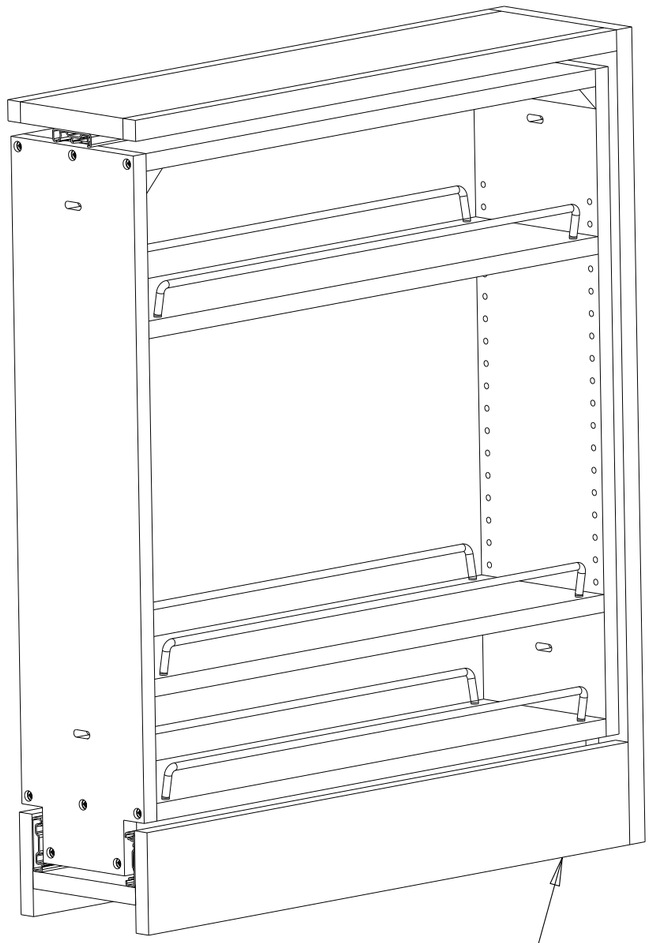

UNIT MAY NEED TO BE CUT DOWN TO FIT CABINET OPENING (CUT AT BOTTOM ONLY).

| PART DIMENSIONS | | |
|---|---|---|
| | MIN | MAX |
| WIDTH | 6.00 [152,4] | |
| DEPTH | 23.00 [584,2] | |
| HEIGHT | 26.37 [669,8] CUT DOWN MINIMUM | 27.31 [693,7] NOT CUT DOWN |

| MIN CABINET OPENING | | | | |
|---|---|---|---|---|
| | FACE FRAME | FRAMELESS | INSET FACE FRAME | INSET FRAMELESS |
| WIDTH | 6.00 [152,4] | 6.00 [152,4] | 6.00 [152,4] | 6.00 [152,4] |
| DEPTH | 23.00 [584,2] | 23.00 [584,2] | 23.75 [603,3] | 23.75 [603,3] |
| HEIGHT NOT CUT DOWN | 27.31 [693,7] | 27.31 [693,7] | 27.31 [693,7] | 27.31 [693,7] |
| HEIGHT CUT DOWN | 26.37 [669,8] | 26.37 [669,8] | 26.37 [669,8] | 26.37 [669,8] |

| SLIDE SPECIFICATIONS | | | | |
|---|---|---|---|---|
| SLIDE TYPE | BALL BEARING | SLIDE EXTENSION | FULL | MAX WEIGHT RATING |
| SLIDE CLOSING | N/A | SLIDE LENGTH | 550 MM | |
| SLIDE MOUNTING | N/A | SLIDE FINISH | ZINC | 100 LB |

| PRODUCT MAX WEIGHT RATING |
|---|
| BMHA STANDARDS |

*CUSTOMER DRAWING*

This drawing is the property of Rev-A-Shelf (RAS) and is disclosed in confidence to the extent its subject matter is original to RAS. Any vendor receiving this drawing from RAS shall hold and use this drawing for the sole benefit of RAS and shall not disclose it to, or use or reproduce it for any third party, or perform any act adverse to the interest of RAS with respect to this drawing without the express written permission of RAS. Vendors shall not revise any physical, dimensional or performance characteristic unless authorized by Rev-A-Shelf Engineering.

| REV. | DATE | BY | DESCRIPTION OF CHANGE |
|---|---|---|---|
| | | | |
| | | | |
| | | | |
| | | | |

INCH [MM] — AMERICAN PROJECTION

| | BY | DATE |
|---|---|---|
| DRAWN | LCS | 8/08/22 |

TOLERANCES
MAT. DEC.
(WOOD) .XX ±.03 [.8mm]
(OTHER) .XX ±.02 [.5mm]
(ALL) .XXX ±.005 [.13 mm]
FRACTIONS ±1/32 [.8 mm]
ANGLES ±1/2°

MATERIAL
FINISH

REV-A-SHELF® INC.

SIZE B — 6" BASE ORGANIZER PULLOUT 438

DRAWING NO. 438-BC-6C — SCALE 0.200

PART NO. 438-BC-6C — SHEET 2 OF 2